Design/System/Construction/Assembly Usage Disclaimer

- Authorities Having Jurisdiction should be consulted in all cases as to the particular requirements covering the installation and use of UL Certified products, equipment, system, devices, and materials.
- Authorities Having Jurisdiction should be consulted before construction.
- Fire resistance assemblies and products are developed by the design submitter and have been investigated by UL for compliance with applicable requirements. The published information cannot always address every construction nuance encountered in the field.
- When field issues arise, it is recommended the first contact for assistance be the technical service staff provided by the product manufacturer noted for the design. Users of fire resistance assemblies are advised to consult the general Guide Information for each product category and each group of assemblies. The Guide Information includes specifics concerning alternate materials and alternate methods of construction.
- Only products which bear UL's Mark are considered Certified.

Roof Deck Constructions

See General Information for Roof Deck Constructions

Construction No. **508A**

October 03, 2023

Uplift — Class 90
Fire Not Investigated

Cookies on UL Solutions
We use cookies to personalize content and ads, to provide social media features and to analyze our traffic. We also share information about your use of our site with our social media, advertising and analytics partners. Learn more

Cookies Settings | Reject All | Accept All Cookies

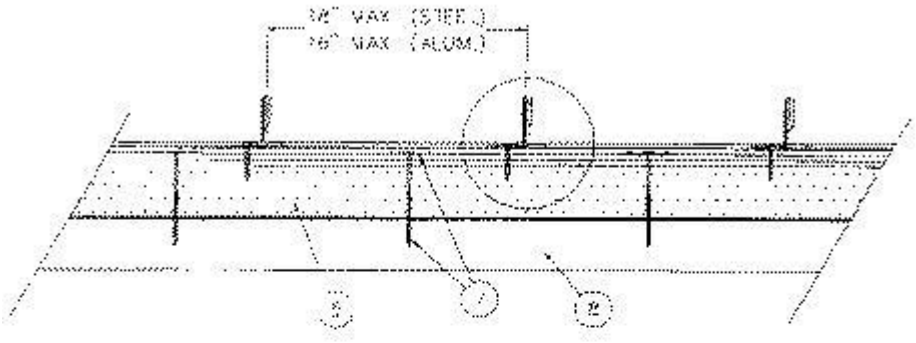

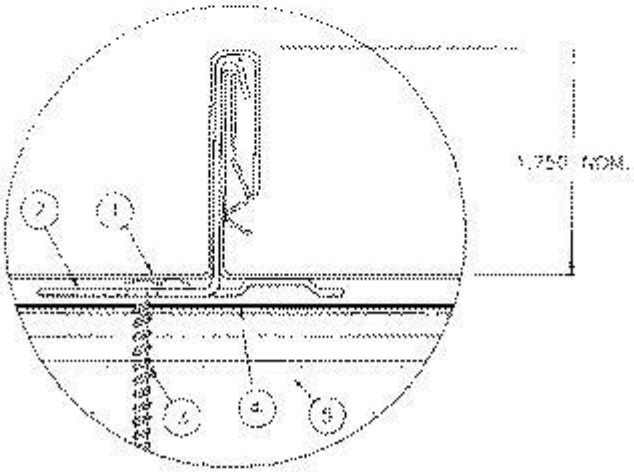

1. **Metal Roof Deck Panels* —** (When used with nailable insulation) — No. 24 MSG min thick coated steel panels, 18 in., 16 in., 12 in. or 10 in. wide or 0.032 in. min thick aluminum, 16 in., 12 in. or 10 in. wide; 1-3/4 in. high at female side rib. Panels continuous over three or more clips with no end laps. A bead of sealant may be used at panel side joints.

ACI BUILDING SYSTEMS INC (View Classification) — "SnapLok"

AMERICAN BUILDING COMPONENTS (View Classification) — "LokSeam"

BEACON SALES ACQUISITION INC, DBA COASTAL METAL SERVICE (View Classification) — "EZ-LOC"

BERRIDGE MFG CO (View Classification) — "Snaplock Panel"

BORGA STEEL INC (View Classification) — "Vertical Lock"

CENTRAL STATES MFG INC (View Classification) — "Central Snap"

CENTRAL TEXAS METAL ROLLFORMING INC (View Classification) — "Shurloc 175"

CENTRIA, A DIVISION OF NCI GROUP INC (View Classification) — "SDP 175-12, -16, -18" (steel only)

DIMENSIONAL METALS INC (View Classification) — "Ultra-Lock 20"

DREXEL METALS INC (View Classification) — "DMC 175S"

Cookies on UL Solutions
We use cookies to personalize content and ads, to provide social media features and to analyze our traffic. We also share information about your use of our site with our social media, advertising and analytics partners. Learn more

EAST TEXAS ARCHITECTURAL SHEETMETAL L L C, DBA ETAS INC (View Classification) — "STRUCTURAL SNAP LOCK"

FIRESTONE METAL PRODUCTS, A DIV OF FIRESTONE BUILDING PRODUCTS CO LLC (View Classification) — "UC-14"

GIDEON STEEL PANEL CO L L C (View Classification) — "G175s"

H&H METAL PRODUCTS INC (View Classification) — "Uni-SnapLoc"

HPM BUILDING SUPPLY (View Classification) — "Sur-Lock"

LAWMAN HEATING & COOLING INC (View Classification) — "SS675"

MASTERPIECE METALS (View Classification) — "SS675"

MBCI (View Classification) — "LokSeam"

MCELROY METAL MILL INC (View Classification) — "Medallion-Lok"

METAL FORMING INC (View Classification) — "1.75 Snap Lock Steel Panel" or "1.75 Snap Lock Aluminum Panel"

METAL PANELS INC (View Classification) — "StrongSeam SL175"

METAL ROOFING SYSTEMS INC (View Classification) — "MRS System 2000"

METAL SALES MANUFACTURING CORPORATION (View Classification) — "Vertical Seam"

METALLION INDUSTRIES INC (View Classification) — "Clip Lock"

MIDWEST METAL (View Classification) — "SS 675"

NCI BUILDING SYSTEMS L P (View Classification) — "LokSeam"

NEW TECH MACHINERY CORP (View Classification) — "SS 675"

NORTHWEST ROOF TILE & METAL L L C (View Classification) — "LT175"

P S M L V INC DOING BUSINESS AS PENN SHEET METAL (View Classification) — "PSM175SL"

PETERSEN ALUMINUM CORP (View Classification) — "Snap-Clad"

REEDS METALS OF BENTON (View Classification) — "Secure-Seam"

RLS METAL SYSTEMS INC (View Classification) — "RLS 175S"

RPR INC, DBA RAIN PROOF ROOFING (View Classification) — "RP175"

Cookies on UL Solutions

We use cookies to personalize content and ads, to provide social media features and to analyze our traffic. We also share information about your use of our site with our social media, advertising and analytics partners. Learn more

ROLLFAB METAL BUILDING PRODUCTS (View Classification) — "SL-175", "1.75 Snap Lock Steel Panel", or "1.75 Snap Lock Aluminum Panel"

ROOF WORKS FABRICATING L L C (View Classification) — "Snap Lock 675"

SHEET METAL WORKS OF ARIZONA (View Classification) — "SL175"

SHEFFIELD METALS INTERNATIONAL (View Classification) — "SMI 1 3/4" SnapLock"

STANDARD STRUCTURES INC (View Classification) — "SnapSeam"

STREAMLINE ROOFING & CONSTRUCTION INC (View Classification) — "175SL"

TAYLOR METAL INC, DBA TAYLOR METAL PRODUCTS (View Classification) — "Versa Span"

UNION CORRUGATING CO (View Classification) — "SL175"

U S METALS L L C (View Classification) — "US-175LS"

VOGLER SHEET METAL COMPANY (View Classification) — "VSM Snap-Tite"

WESTERN STATES METAL ROOFING (View Classification) — "Western Lock®"

WHIRLWIND STEEL BUILDINGS INC (View Classification) — "Weather Snap-12" or "Weather Snap-16"

1A. **Metal Roof Deck Panels* —** (When used with structural cement fiber unit) — No. 24 MSG min thick coated steel panels, 18 in, 16 in, 12 in, or 10 in wide, 1-3/4 high at female side rib. Panels continuous over three or more clips. Endlaps for panels to be overlapped 6 in. A bead of sealant may be used at panel ends and side joints.

AMERICAN BUILDING COMPONENTS (View Classification) — "LokSeam"

MBCI (View Classification) — "LokSeam"

MCELROY METAL MILL INC (View Classification) — "Medallion-Lok"

TREMCO CPG INC. — "TremLock SL"

NCI BUILDING SYSTEMS L P (View Classification) — "LokSeam"

2. **Roof Deck Fasteners* — (Panel Clips) —** One piece assembly, 3-1/2 in. wide, 1-7/8 in. high. No. 18 MSG min thick coated steel. Clips spaced 36 in. OC max for steel panels and 18 in. OC max for aluminum panels. Fastened to nailable insulation (Item 5).

AMERICAN BUILDING COMPONENTS (View Classification) — "LokSeam UL90 Clips"

CENTRIA, A DIVISION OF NCI GROUP, INC (View Classification) — "C175"

EXCEL STAMPING & MFG INC (View Classification) — "LS-178-18 Clip"

LOGAN STAMPINGS INC — "Snap Lock Clip No. 675"

Cookies on UL Solutions

We use cookies to personalize content and ads, to provide social media features and to analyze our traffic. We also share information about your use of our site with our social media, advertising and analytics partners. Learn more

MCELROY METAL MILL INC (View Classification) — "Medallion-Lok Clip"

NCI BUILDING SYSTEMS L P (View Classification) — "LokSeam UL90 Clips"

PETERSEN ALUMINUM CORP (View Classification) — "Snap-Clad Clip"

2A. **Roof Deck Fasteners* — (Panel Clips) —** One piece assembly, 3-1/2 in. wide, 1-7/8 in. high. No. 18 MSG min thick coated steel. Clips spaced 36 in. OC max for steel panels. Fastened to structural cement-Fiber unit

HPM BUILDING SUPPLY (View Classification) — "Shur-Lock Clip"

AMERICAN BUILDING COMPONENTS (View Classification) — "LokSeam UL90 Clips"

MCELROY METAL MILL INC (View Classification) — "Medallion-Lok Clip"

NCI BUILDING SYSTEMS L P (View Classification) — "LokSeam UL90 Clips"

2B. **Roof Deck Fasteners* — (Panel Clips) —** One piece assembly, 3-1/2 to 3-3/4 in. wide, 1-7/8 in. high. One panel clip located at each purlin intersection. Min thickness 0.048 in. (No. 18 MSG).
METAL SALES MANUFACTURING CORPORATION (View Classification) — "Vertical Seam Clip"

3. **Fasteners — (Screws) —** Fasteners used to attach panel clip (Item 2) to nailable insulation (Item 5), or structural cement-fiber units (Items 5A or 5D) to be No. 10-12 by 1 in. long pancake head, No. 2 Phillips drive, A-point, coated steel screws. Min two fasteners per clip.

4. **Underlayment —** Underlayment used over nailable insulation (Item 5) to be Type 30 organic felt. Sides overlapped min 2 in. End laps per manufacturer's instructions. Felt nailed to nailable insulation with 1 in. long galvanized steel roofing nails, located in side laps and between side lap per manufacturer's instructions. Nail spacing to be max 12 in. OC at the side lap and max 24 in. OC in interior rows.

5. **Nailable Insulation —** Consisting of 1 in. min. to 3-1/2 in. max thick Classified polysisocyanurate foamed plastic with a factory laminated 7/16 in. thick APA rated O.S.B. Density of foamed plastic to be 2 pcf.

5A. **Structural Cement-Fiber Unit — (Substructure) —** (Not Shown) (used in lieu of Nailable Insulation (Item 5) Consists of a minimum 5 in. thick composite structural cement-fiber units with foamed plastic core of a minimum 0.95 PCF density expanded polystyrene and 7/16 in OSB structural use panels on one face. All transverse butt joints are to occur over structural support. Unit will be designated as plank (tongue and groove) when used without truss tees (Item 5B). Unit will be designated as tile (rabbetted) when used with truss tees.
TECTUM INC (View Classification) — "Type E"

5B. **Truss Tee —** (Optional) — (Not Shown) — Minimum size to be 5-6-17-2. Maximum spacing to be 48-1/4 in. OC. Tees to be welded to structural support (Item 6) with a 3/4 in. fillet weld on both sides of tee.

5C. **Tectum Grout —** (Optional) — (Not Shown) — Used with truss tee (Item 5B) and tile (rabbetted) type substructure (Item 5A). Grout to fill void between substructure tiles around and above truss tee.

5D. **Structural Cement-Fiber Unit (Substructure) —** (Not Shown) — (May be used in lieu of Item 5A) — Consists of a minimum 5 in. thick composite structural cement-fiber units with foamed plastic core of a minimum 1.5 PCF density expanded polystyrene 7/16 in OSB structural use panels on one face. All transverse butt joints are to occur over structural support. Unit will be designated as plank (tongue and groove) when used without truss tees (Item 5B). Unit will be designated as tile (rabbetted) when used with truss tees.
TECTUM INC (View Classification) — "Type III"

Cookies on UL Solutions
We use cookies to personalize content and ads, to provide social media features and to analyze our traffic. We also share information about your use of our site with our social media, advertising and analytics partners. Learn more

6. **Supports — (Purlins) —** (Not Shown) — Purlins used for liner panel (Item 8) support to be cold formed steel sections. As alternatives, structural steel components (hot rolled beams, channels, open web joists, etc.) may be used. Min gauge and yield to depend on design considerations for uplift loading with max spacing to be 6 ft OC. As alternatives, structural steel components (hot rolled beams, channels, open web joists, etc.) may be used. Size and spacing of structural components to depend on design considerations.

7. **Fasteners — (Screws) —** Fasteners used to attach nailable insulation (Item 5) to liner panel (Item 8) to be No. 11-13, No. 3 Phillips drive, truss head, painted steel screws. Length to depend on overall thickness of deck and to penetrate steel deck 1/2 in. min.
A 2 in. diameter formed pressure plate fabricated from No. 22 MSG coated steel to be used with each screw. Fasteners located in three rows along the 8 ft length of the nailable insulation beginning 6 in. from the 8 ft edges with a row down the center and spaced 21 in. OC beginning 6 in. from the 4 ft edges. A total of 15 fasteners used for each 4 by 8 ft board.

Fasteners used to attach Structural Cement Fiber Units (Items 5A or 5D) to structural support (Item 6) to be minimum 6 in. long, No. 14 screw with 5/8 in. diameter head. Fasteners are spaced a maximum of 12 in. OC at each joist along butt end. Pre-drilling with a 3/16 in. bit for steel up to 1/8 in. thick or with a 7/32 in. bit for steel greater than 1/8 in. thick when required.

8. **Liner Panel (Steel Deck) —** (Optional when structural cement fiber units (Items 5A or 5B) are used) — No. 22 MSG min thick coated steel. Min depth 1-1/2 in., max pitch 6 in. fabricated to various profiles. Min yield strength 33,000 psi. Fastened to supports (Item 6) with fastener type and spacing per liner panel manufacturers instructions for uplift loading.

9. **Gypsum Board —** (Optional) — (Not Shown) — Max thick 5/8 in. supplied in 4 by 8 ft sheets. Butt joints located over crests of metal roof deck panel (Item 1). Fastened to panel with same fasteners used for nailable insulation (Item 5).
Refer to General Information, Roof Deck Construction (Roofing Materials and Systems Directory) for items not evaluated.

*** Indicates such products shall bear the UL or cUL Certification Mark for jurisdictions employing the UL or cUL Certification (such as Canada), respectively.**

Last Updated on 2023-10-03

The appearance of a company's name or product in this database does not in itself assure that products so identified have been manufactured under UL Solutions' Follow - Up Service. Only those products bearing the UL Mark should be considered to be Certified and covered under UL Solutions' Follow - Up Service. Always look for the Mark on the product.

UL Solutions permits the reproduction of the material contained in Product iQ subject to the following conditions: 1. The Guide Information, Assemblies, Constructions, Designs, Systems, and/or Certifications (files) must be presented in their entirety and in a non-misleading manner, without any manipulation of the data (or drawings). 2. The statement "Reprinted from Product iQ with permission from UL Solutions" must appear adjacent to the extracted material. In addition, the reprinted material must include a copyright notice in the following format: "©2023 UL LLC."

Cookies on UL Solutions

We use cookies to personalize content and ads, to provide social media features and to analyze our traffic. We also share information about your use of our site with our social media, advertising and analytics partners. Learn more